OP-V6 ↓

ƀ ᴄ

ą

й

ᴄ ᴵ V1.2

1. ƀ ᵹ : 2
2. ƀ ᵹ à ǐ ʷ 2
2.1 LED 2
2.2 ƀ 3
2.3 4
2.4 ƀ ᵹ ʷ 5
2.5 ƀ ᵹ 5
3. ˥ ǐ ℗ 6
4. ǎ 7
5. ǎ 8
6. Ḡ ǎ 11
7. Q ɜ 11
8. ɜ 11
9. ɜ 12
10. 12
11. 13
12. 14
12.1 14
12.2 ˜ ƀ 14
12.3 ᴧ ˜ ƀ 15
12.4 ˥ 15
13. ǎ 15
14. ₮ ᴧ 16
15. ᵹ̣ ˜ 16

1. ƀ ƨ :

ƀ ƨ ˪ ɛ Ғ ǐ Â ɥ ą
ɛ ˘ ǐ Ţ ˜ Â ƀ
ȁ ƀ ǐ ǐ Ⓟ Ạ ʏ Â



ɛ 1 ƀ ƨ ɛ

2. ƀ ƨ ȁ ǐ w

ƀ ƨ OP-V6 128 × 64 LCD ƨ ȁ 5 ɑ LE
ɑ w Â ɛ 1 Â

2.1 LED

ƀ ƨ 5 ɑ LED ȁ ضر ˪ ƨ
w 1 Â

1 LED O ɥ ǐ w

O	w
DRV	˪ ƨ ɢ ˘

2.2 ƀ

ƀ ƨ Ţ Ĭ, 11 ɷ ƀ O ɥ ĭ ɯ 2 Â

2 O ɥ ĭ ɯ

	O	ɯ

2.3

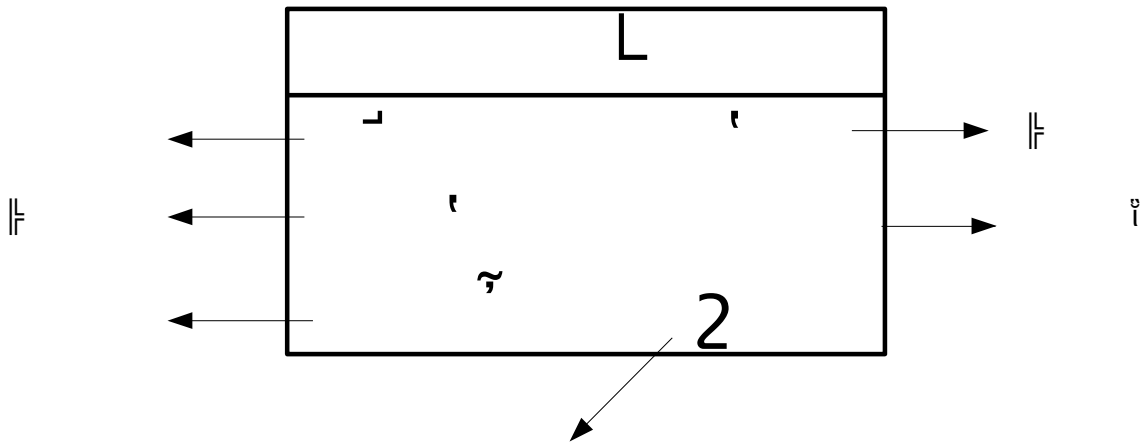

2

1		1	
	INSP		
	ARD		
	MANU		
	AUTO		
	FIRE		
	STOP		
	USER		
	INSP		
2			
3			
	CLOSE		
	OPEN		
4		2	
	F ULL	2	
	OVER		
	GROUP		
	TWINS		
5			
	ERR XX	XX	

2.4 ƀ كح ʷ

ƀ كح ǐ γ Ǧ h ʷ Â

1. Ţ ˜ Â
2. ǎ ≢ ǐ Â
3. ˧ Â
4. ǐ ˩ كح Â
5. ǎ à غ Ḡ Â
6. Q ʒ Â
7. ǎ ʒ Â
8. ʒ Â
9. Â
10. ˧˥˘ ǐ Â
11. ǎ à ⁝ ᴰ غ Ǧ Â
12. ₮ ˧˥ ṿ Â

2.5 ƀ كح

˩ كح ƀ كح ᵕ̀ ˩ كح ╟ Ǧˆ قمم

˜ ˘ ʿP ƀ كح F ʷ̄ ƀ كح˘ ʒ ʷ̄

ʃ h USB1 كح ⁝ Â ضي Ḡ ˜ U˘ ⁝ ˩ كح ╟ Â

ʽ

1. ƀ كح à ˧˥ ˜ à ₮ شخ˜ ضي ˩ كح ʼ Ǧ Â˜ ˧˥ ƀ كح Â
2. à ˧˥ ˜ à ₮ ƀ كح˘ γ ᵕ̃ ƀ كح à ₯ Â
3. ˛ Ḡ Ǧ ƀ كح ǐ ǐ ˘ ˧˥ à شخ غ ɢ ɷ Â
4. ˜ ą ˩ ˆ 3m γ ⁝ ˜ Â

3. ꓘ ĭ ℗

ƀ ᴄ ꓘ ĭ ℗ ᴢ ᴢ 3 Â

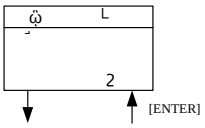

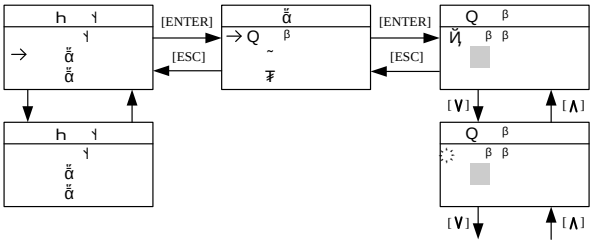

4.



5.

ضي [UP] [DOWN] [ENTER]

ضي [UP] [DOWN]

ضي ضي [ENTER]

ضي

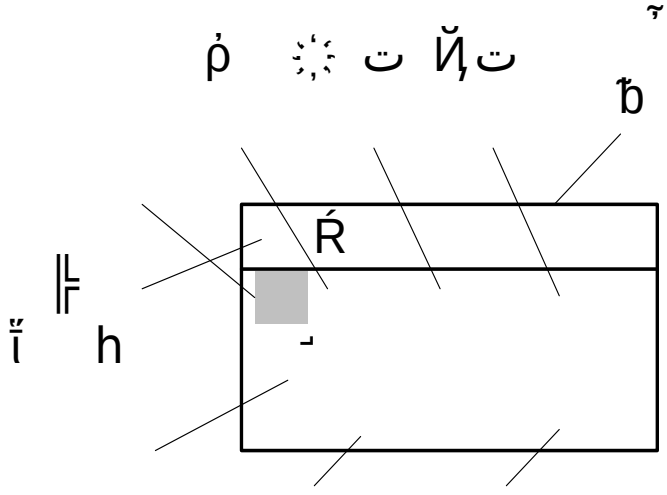

ضي ˜ ∟ ˘ ˆ ʏ Ţ ˘ [LEFT] ľ ╠ ∟
פ’ [RIGHT] ľ ˜ ╠ ∟ פ’ [UP] ľ ∪ ∟ פ’ [DOWN]
ľ ˜ ∪ ∟ פ’ [RES] ŭ ˜ פ Â
˜ ∟ ƀ يح 7 Â

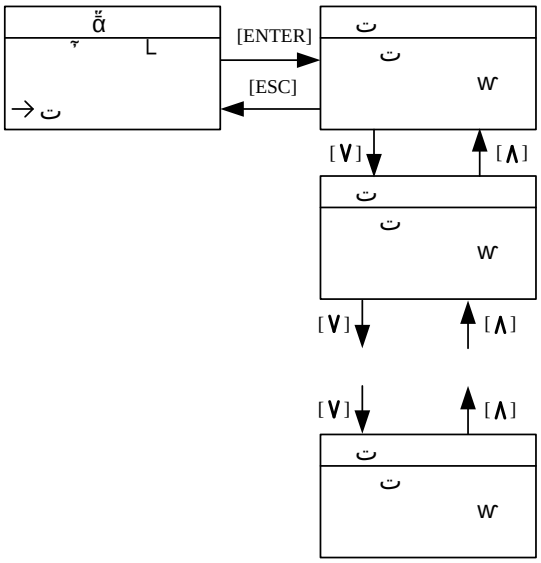

يد 9 ت ƀ يد

ضي ˘ يد 10 Â

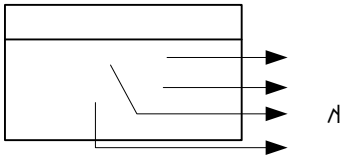

يد 10 يد

ﻻ L كح

OK

ER L كح ˆ ĭ ﻻ ˜ ˘ ч ѿ

ṿ ﻻ Â

OK

ET L كح ǖ ˆ ɘ ˜ ˘ ч ѿ ṿ

Â

OK

ER ƀ ˆ ѡ ˜

OK ӊ̃

ET/ER ӊ̃ ƀ ˆ ѡ ˜

6. Ḡ ǟ

ضي Ḡ ǟ ˘ [ENTER] ˆ ضي F ϟ Ӄ ǟ Ḡ Â Ḡ
Ţ˘ ϥ ľ Ţ Ľ˘ U ľ ѡ Ľ ľ Ľ Â
Ḡ ǟ ƀ يح 11 Â

يح 11 Ḡ ǟ ƀ يح

7. Q ӟ

˜ Q ӟ U˘ ϥ ľ ⌠ Ӄ β Ľ ˘ Ƀ Q
ӟ˘ ѿ ⌠ Ӄ β β ˘ ľ ⌠ Ӄ β Ľ ˘
ľ Ľ U˘ [ENTER] Q ӟ ÂQ ӟ U˘
╠ ӟ ˘ ϥ ľ Ţ Ľ’ Q ӟ U˘
ϥ ľ ѡ Ľ’ ӟ Ţ ǖ ˘ ϥ ľ Ľ˘
Ŧ Â [ESC] ˘ ϟ Â
Q ӟ ƀ يح 12 Â

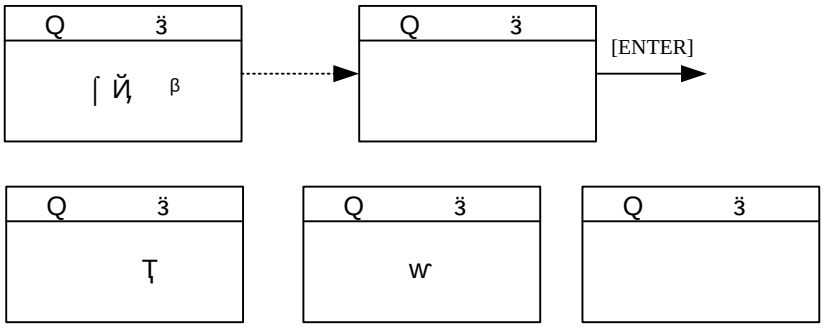

يح 12 Q ӟ ƀ يح

8. ӟ

ӟ´ Ƈ ӊ № ṗ ˘ ϟ ӟ غ ǟ ӟ Â ضي
ӟ ˘ ˆ Y [UP] [DOWN] ˗ ˘ ӟ ṗ ˘ [ENTER]
˜ h ӟ ṗ Â
ضي ӟ ǟ ӟ ˘ [ENTER] ӟ Â ӟ
U˘ ƀ ک ╠ ӟ ϥ ľ Ţ Ľ˘ ӟ U ϥ ľ ѡ Ľ˘

ضي ӟ Ţ˘ ₮ ↕ Ţ ӟ ˘ ľ ӟ Ľ˘ ч ľ
Ľ˘ Â

' ضي ӟ ╠ ѿ F5 غ F8 ч Ţ Â

ضي Ӣ˘ ѿ ǟ ӟ˘ ʼP ӟ Â [ESC]
˘ ⁝ ч Â

ӟ ƀ يح 13 Â

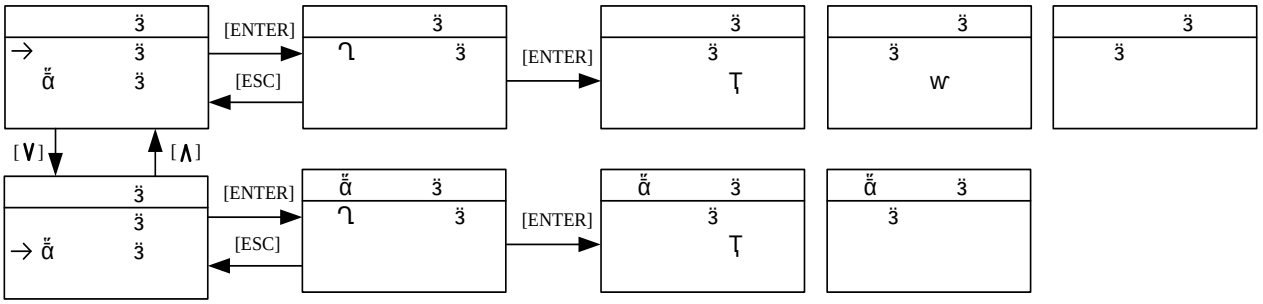

يح 13 ӟ ƀ يح

9. ӟ

ӟ Ӟ´ ӊ ṗ ч ӟ غ ӟ Â

ضي ӟ ˘ ˜ ʏ [UP] [DOWN] ˗ ˘ ӟ ṗ
˘

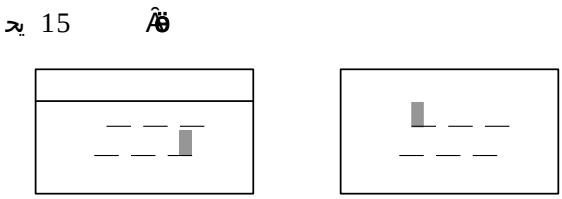

12.

~ ˘ ˜ ϒ ƀ ʊ ˘ ǟ ≢ ˘ ~ ˘

ϒ Â

ƀ ϟ 17 Â

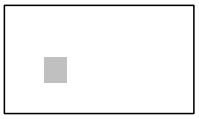

ϟ 17 ƀ ϟ

12.1

ƀ ϟ 18 Â

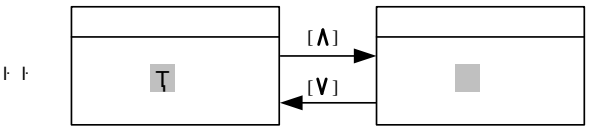

ϟ 18 ƀ ϟ

[UP] [DOWN] ˘ [ENTER] Ḡ Â

~ ь ḱ ƀ يح 19 Â

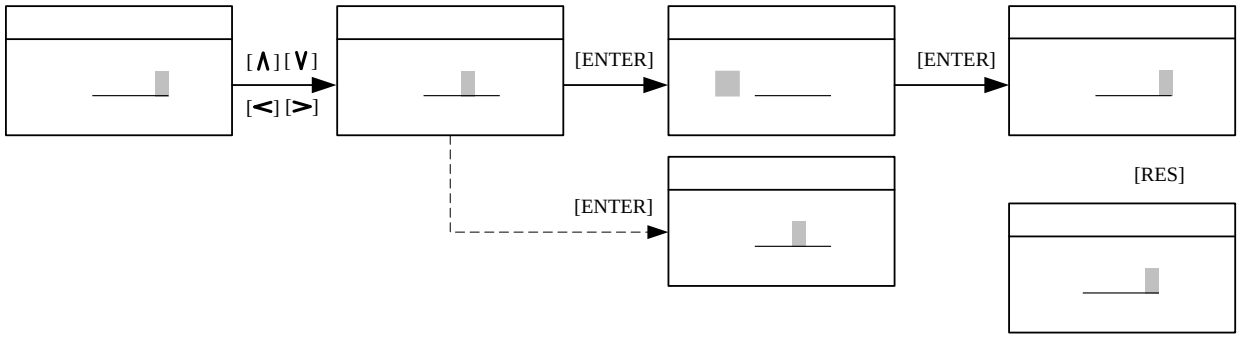

يح 19 ~ ь ḱ ƀ يح

12.3 ᴧ ~ ь

ƀ ǟ ~ ь Â

12.4 ѡ

ч ꙅ Ḃ ѡ Ⓟ ˘ ꙅ ɣ Й̧ ꙁ ѡ ˈ

1. Ţ Ⓟ ˈ ƀ ᶜ̧ ̣ Δ ˆ ᴧ h ~ ˘ ˩ SHIFT ь ˘ ˈP ˩ MENU ь ˘ 1š Ţ ь ψ Ⓟ ’

2. ˈ ƀ ᶜ̧ ̣ Δ ˆ ᴧ h ~ ˘ ˩ RES ь ˘ 1š ˝ ψ ị̌ ’

3. ˜ ь ˈ ƀ ᶜ̧ ̣ Δ ˆ ᴧ h ~ ˘ ˩ SHIFT ь ˘ ˈP ˩ RES ь ˘ 2š ψ ˜ ь Â

13. ǟ

ǟ ѡ ч ꙅ ̣ ǟ ġ ˘ ì ɢ ˜ □ ˘ ą ǟ ġ ǐ ᴧ Â ѿ ˜ ǟ ġ U˘ ≠ ѡ ŋ ǟ ˆ ǔ ʃ ƀ ᶜ Ũ ᶜ ˜ ˘ ǔ Й̧ ƀ ᶜ˘ ì ʃ ì ˘ ˈP ≠ ѡ ŋ ǟ Ώ ˜ ˩ ᶜ˘ ضي ǟ U˘ ᴧ˜ Â

ضي ǟ ˘ [UP] [DOWN] ˩ ƀ˘ [ENTER] ƀ Â

ǟ ƀ يح 20 Â

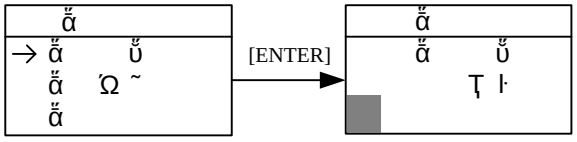

يح 20 ǟ ƀ يح

ƀ U ﻳﺪ 21 Â

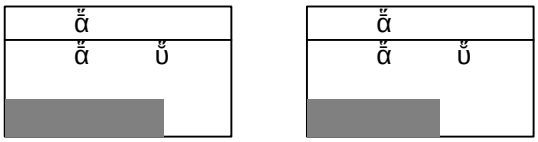

ﻳﺪ 21 ᾰ̈ ƀ U

[ESC] ﻋﺠﻴ ﻻ Â

14. ﺟ ﻻ

ˇ ˆ ﻻ L ﻛﺞ ﺟ ﻻ Â ˜ ﺟ ﻻ ˇ [ENTER]
ˇ غ Â
ﺟ ﻻ ƀ ﻳﺪ 22 Â

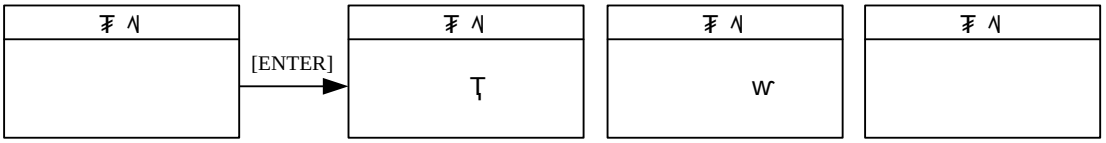

ﻳﺪ 22 ﺟ ﻻ ƀ ﻳﺪ

[ESC] ﻋﺠﻴ ﻻ Â

15. ﻷ ˜

ą ﻷ ẅ r ˇ Ӟ ﻷ ˚ ˇ ˜ ﻷ
ﻗﻤﻢ ﻻ ï ﻛﺞ Ḥ ˇ ﻻ ˆ ˜ ᾰ̈ Â
ľ ﻷ ˜ Ľ ﻳﺪ 23 ˆ a˜ Â ˆ ˜ ṗ ﻷ № ˇ Ị . Ľ
№ Â № ﻫ ﻗﻤﻢ ˆ № 4 № Â № ﻫ

[UP] [DOWN] ᾠ ضي β ṕ U [ENTER] ˘ U ᾠ

˘ ⌠ Ӥ ѿ β ˘ ضي ᾠ ضي β ˘ ⊣ Ḃ [ENTER] ˘ ᾠ

Ӟ Ѣ Ψ ˘ ˆ ﻣﻬﻢ 4 β ˘ ᴅ S1.0D- U β ч ˘ ˆ ϒ Ѣ ˜

[ENTER] Ӥ ѿ β ˜ Â

ᾠ ˜ ƀ يح 24 ˆ ϒ S0.75D ч ᴅ ˜ Â

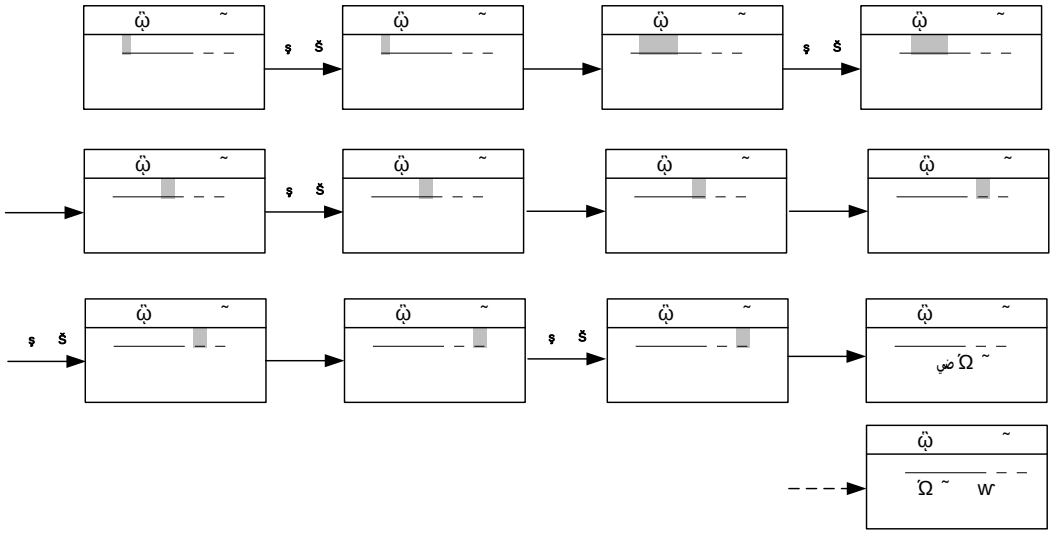

يح 24 ᾠ ˜ ƀ يح